JoktoPur

Two-stage air cleaner with multi-cyclone pre-cleaner

The JoktoPur compact-two-stage air cleaner has an integrated high-efficiency multi-cyclone pre-cleaner with an efficiency up to 95%. This compact-filter provides a high airflow capacity and maximum filter lifetime. The oval, compact filter design enables fitting in a tight space area.

Smaller is Better

Using this philosophy, Longday have designed a new Air Cleaner System that provides a solutions for the problem that all manufactures face today with engines demanding greater performance, new emission legislation, more air consumption and less available engine compartement space. This new concept enables the O.E. to use small Air Cleaner, which achieves the same performance as a conventional Air Cleaner.

Advantages:

- More compact at a given performance level than a conventional filter
- Axial air flow and integrated mounting brakets
- Various possibilities of installation
- Precleaner cover with a separation up to 95%, longer filter service life
- Working temperature - 35 °C a + 85 °C with peaks + 100 °C

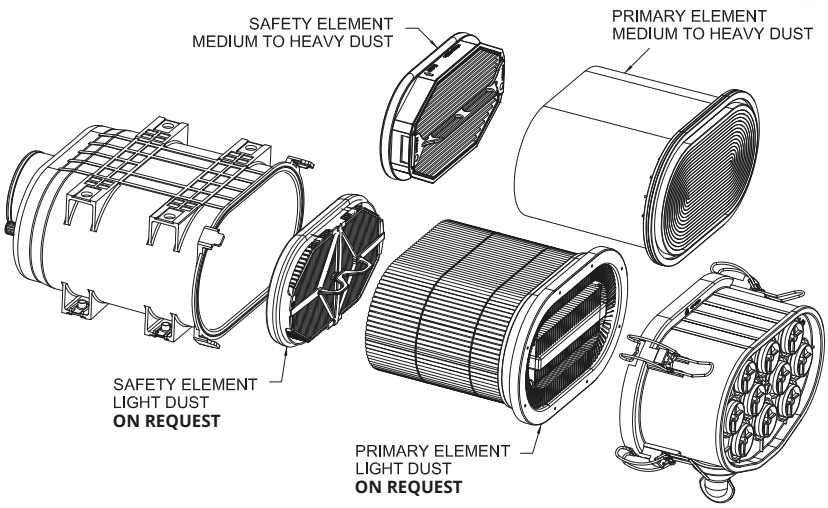

To scavenge is better

Scavenging is obtained by introducing a secondary flow (connecting for example to the ejector muffler) to the drop tube on the multi-cyclone block. In this way the contaminant is sucked into the exhaust stream. JoktoPur is designed to operate with or without scavenging. The main advances of scavenging mode are:

- Longer filter life service, resulting with higher pre-cleaner efficency;
- Drop tube not just straight down but it can be located in various orientations;
- No servicing required (if installed only with evacuator valve and if heavy duty condition occur, can be easily serviced).

Plastic filters service access at the end of the injector FJ series

Horizontal Version

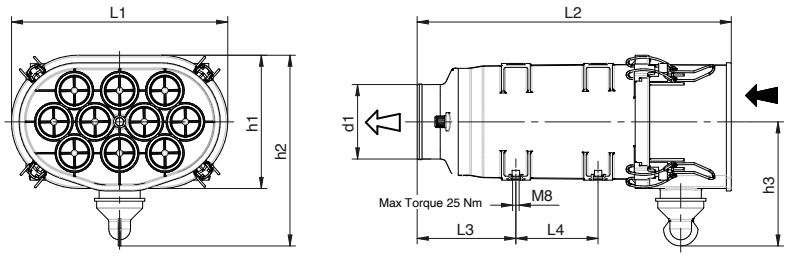

Vertical Version

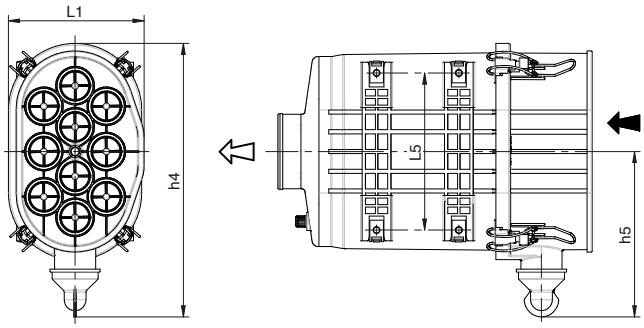

Technical Data

TEMPERATURE OF WORK -35 °C +85 °C (With peaks of + 100 °C)

Inch	Code	Type	Air flow m³/min	Main elements	Safety elements	Dimensions in mm											
						d1	L1	L2	L3	L4	L5	h1	h2	h3	h4	h5	S
4	FJ04-20088C0	horizontal	2,15	CH04-2003700	PST04-2005100	44	162	233	95	-	100	130	183	126	-	-	180
6	FJ06-20460C0	horizontal	4,1	CH06-2027100	PST06-2026400	63,5	230	333	79,5	100	160	151	213,5	138	-	-	200
8	FJ08-19233C0	horizontal	6,4	CH08-1904900	PST08-1962000	90,6	263	382	120	100	191	165	232	151	-	-	200
	FJ08-19136C0	vertical	6,4	CH08-1904900	PST08-1962000	90,6	263	382	120	100	191	165	-	-	333	201	200

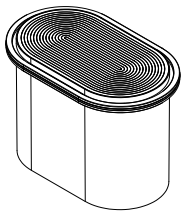

PRIMARY ELEMENT
MEDIUM TO HEAVY DUST

Cod. CH04-2003700
Cod. CH06-2027100
Cod. CH08-1904900
Cod. CH15-2050400

Primary filter removal

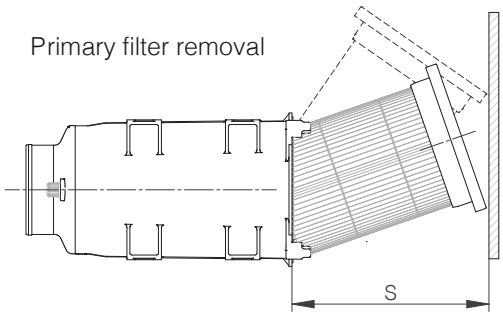

The nominal air flow has been calculated at 200 mm H2O of pressure drop.

Plastic filters service access on the side FJ series

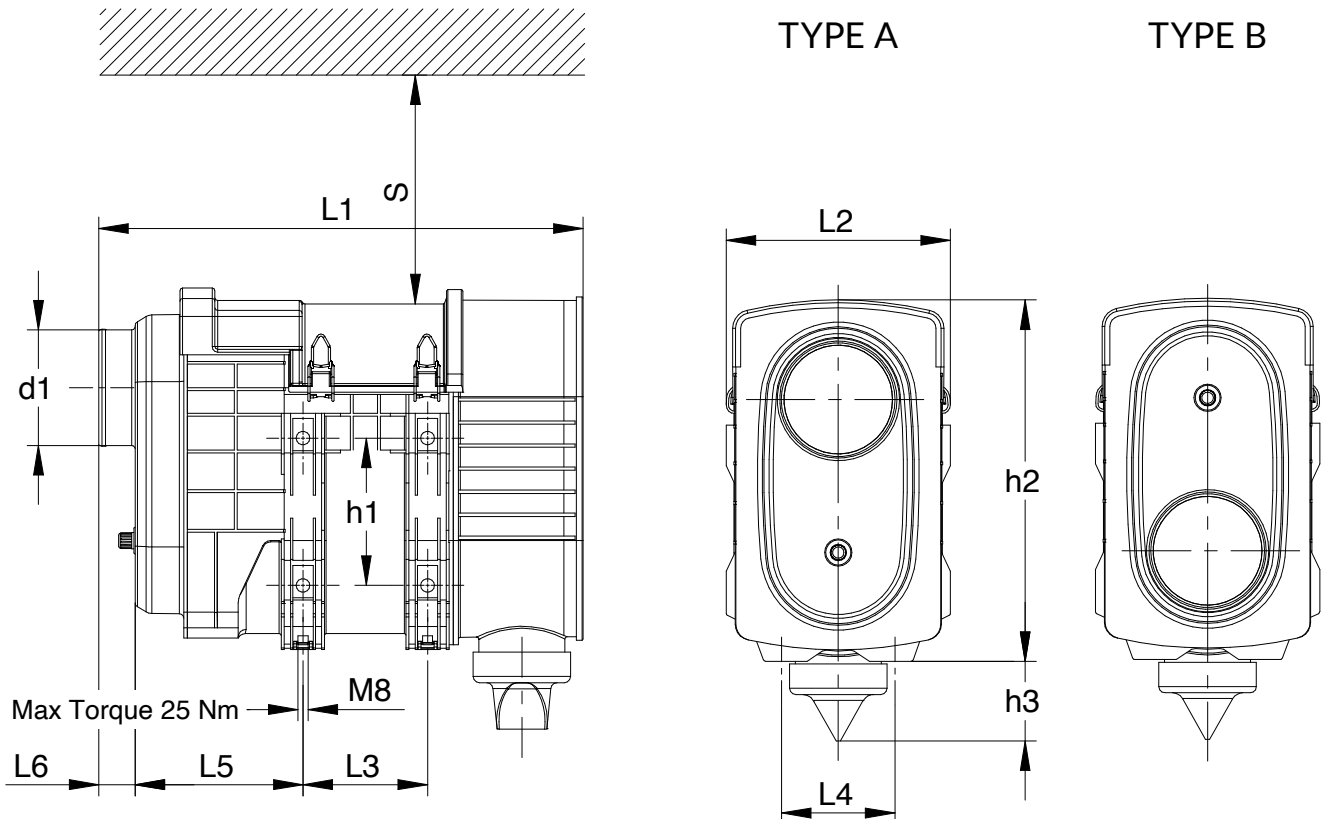

Technical Data

TEMPERATURE OF WORK -35 °C +85 °C (With peaks of + 100 °C)

Inch	Code	Air flow m³/min	Main elementst	Safety elements	Type	Dimensions in mm										
						d1	L1	L2	L3	L4	L5	L6	h1	h2	h3	S
9	FJ09-19155C0	8,4	CH09-1915700	PSC09-1915800	A	102	428	198	110	100	148	32	130	320	71	330
	FJ09-19700C0	8,4	CH09-1915700	PSC09-1915800	B	102	428	198	110	100	148	32	130	320	71	330

The nominal air flow has been calculated at 200 mm H2O of pressure drop.

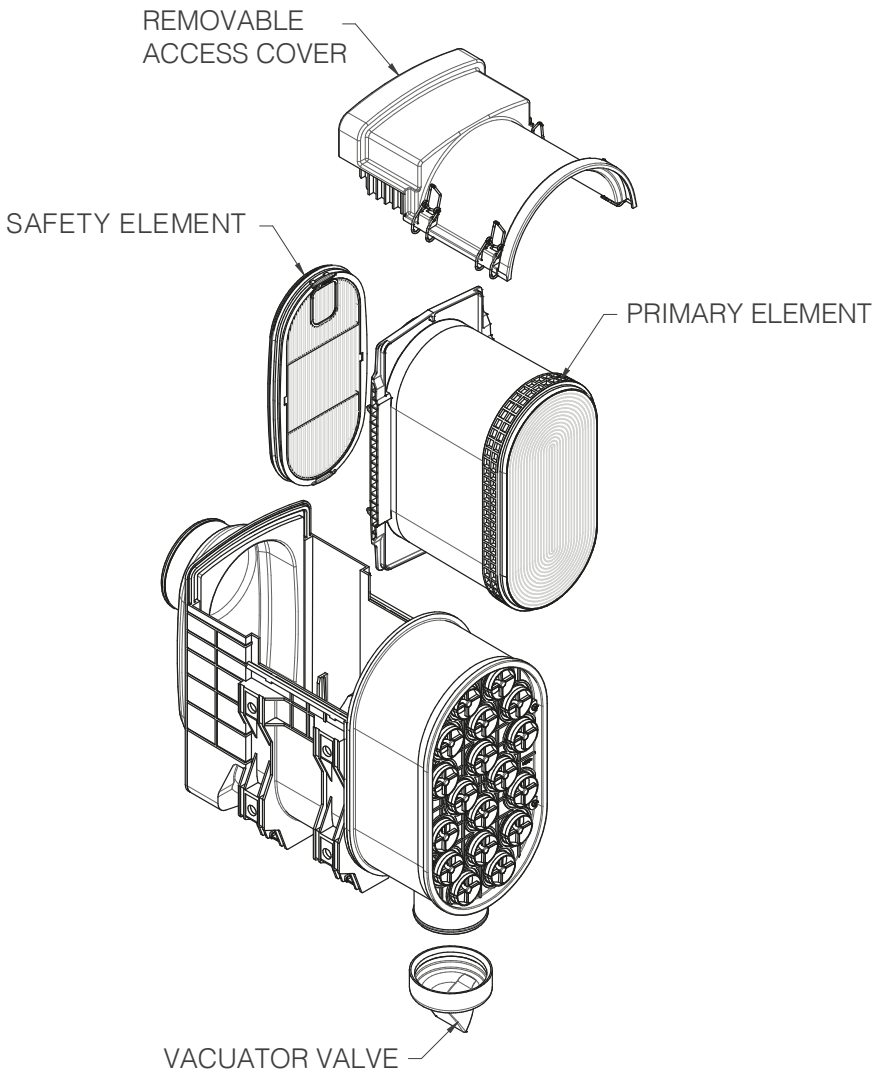

Properties:

- Vertical and horizontal versions
- Integrated high-efficiency multi-cyclone pre-cleaner
- Two-Stage filtration – axial airflow
- High airflow capacity and maximum filter lifetime
- Low space requirement through oval design
- Integrated mounting brackets on two sides of the body
- Works with or without active dust extraction (Scavenging)
- Increased performance with active dust extraction (Scavenging)
- Integrated connector plug for maintenance switch Sentinel
- Operating temperature from -35°C to +85°C with peaks of +100°C
- Volume flow range from 2 m^3/min to 12 m^3/min (20mbar)

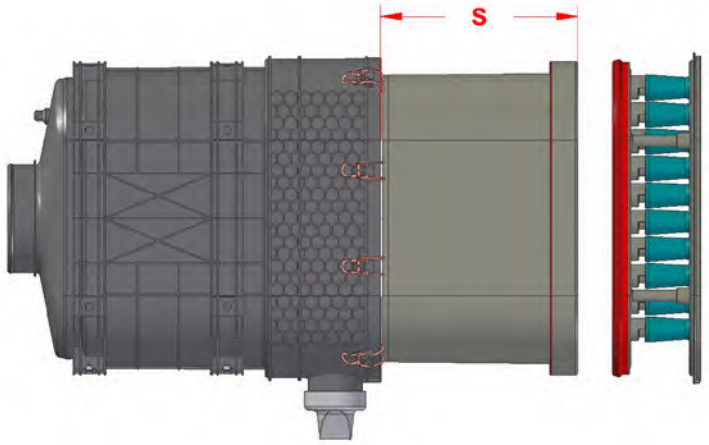

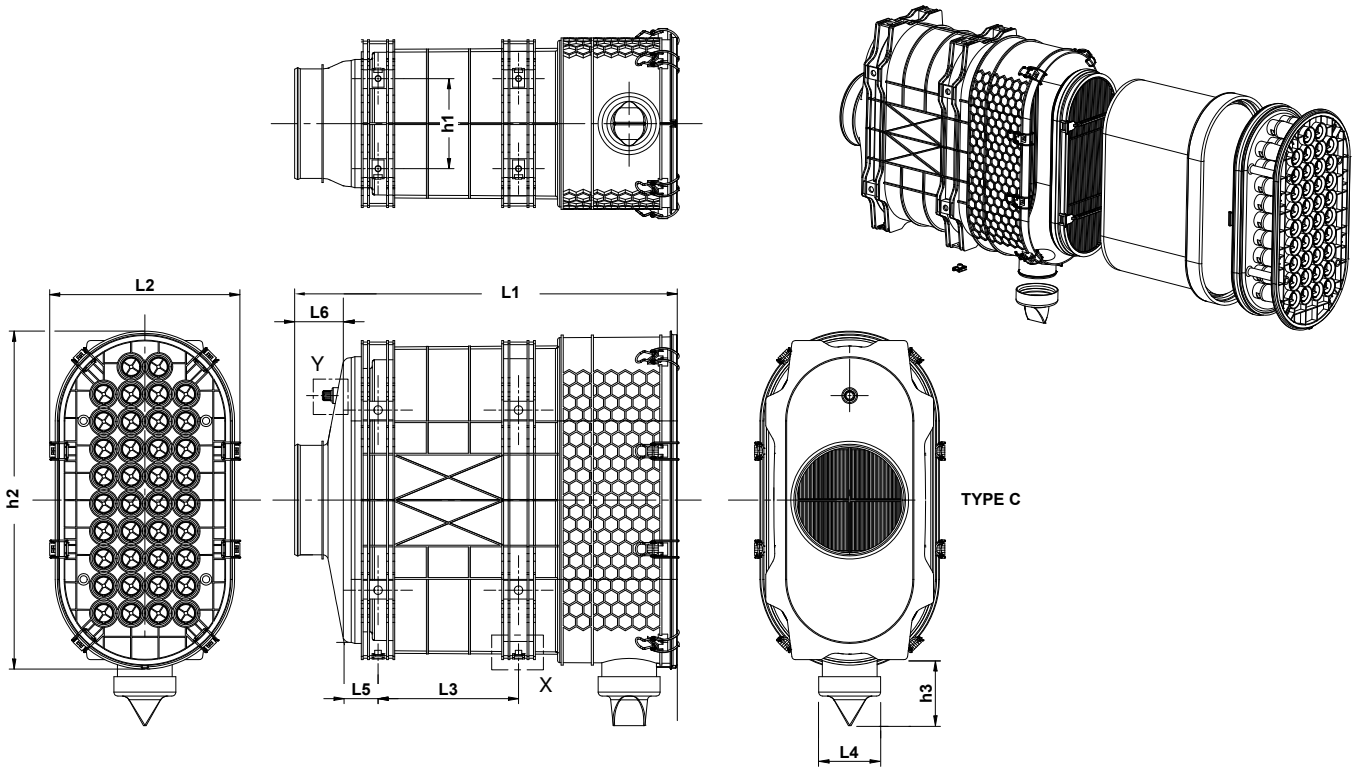

Technical Data

TEMPERATURE OF WORK -35 °C +85 °C (With peaks of + 100 °C)

Inch	Code	Air flow m³/min	Main elementst	Safety elements	Type	Dimensions in mm										
						d1	L1	L2	L3	L4	L5	L6	h1	h2	h3	S
15	FJ15-20521C0	18,4	CH15-2050400	PSC15-2049700	C	152	531	264	195	90	47	68,5	125	469	91,5	275

The nominal air flow has been calculated at 200 mm H2O of pressure drop.

New version of 8" JoktoPur
with dedicated air inlet adapter
coming soon!