Rubber pipes

Special rubber pipe bends and pipes

Longday elbow are manufactured of NBR and to garantee the best seal and easier installation. Longday use material which meet the oem requirements.

Elbow and pipe have the possibility to be supplied with indicator plug and blow by.

Specifications:

- Temperature working range -30 °C +120 °C with peaks +130 °C
- Resistant to oil and lubricants
- Low restriction
- High resistance to vibrations and implosion
- Suit to medium applications
- Indicator plug and blow by as option
- Good noise absorbtion
- Reliable seal

Pipe bends

The compact rubber elbow are manufactured to be fitted on the VikoSeal air cleaner with rigid outlet at 90 ° and really compact, 360° rotation is possible. Designed to get the maximum seal with easy install.

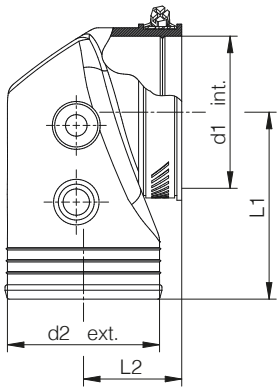

Code	Air cleaner	d1	d2	L1	L2
ET-1695200	FR04	44	44	57	31
ET-1694100	FR05	51	51	66	35,5
ET-1768800	FR05	57	51	68	35,5
ET-1694600	FR06	63,5	63,5	78	41
ET-1694800	FR07	77	76	85	44
ET-1693700	FR08	90,5	89	98	55
ET-1685800	FR09	101	89	105	50,5
ET-1621300	FR10	101	101	120	57

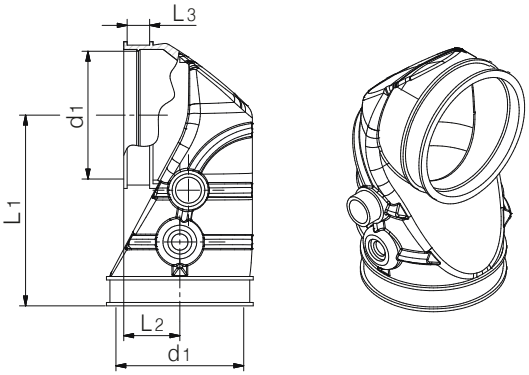

Code	Air cleaner	d1	L1	L2	L3
ET-1532700	FR04	44	70	29	11
ET-1533300 *	FR05	51	89	33,5	13
ET-1535600	FR07	76	110,5	32,5	13
ET-1534700	FR08	89	124,5	40	13
ET-1533100	FR09 - FR10	101	152,5	38	13

* Delivery times to be agreed

Rubber pipe bend

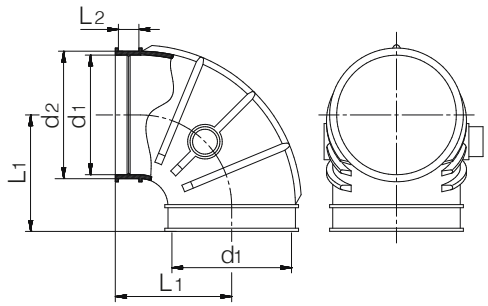

Code	Dimensions in mm					
	d1	d2	d3	L1	L2	L3
ET-1484200	44	49	-	53,5	13	-
ET-1482000	51	55	-	57	13	-
ET-1481400	76	81	-	74	13	-
ET-1482500	89	95	-	81,5	13	-

Pipe bend with connection for service indicator

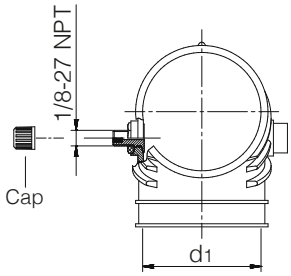

Code	Dimensions in mm					
	d1	d2	d3	L1	L2	L3
ET-1510200	44	-	-	-	-	-
ET-1510800	51	-	-	-	-	-
ET-1511000	76	-	-	-	-	-
ET-1511300	89	-	-	-	-	-

Pipe bend with connection for exhaust

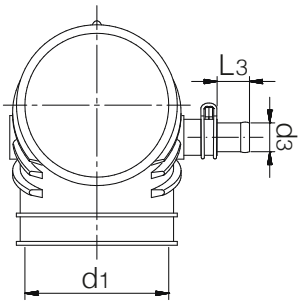

Code	Dimensions in mm					
	d1	d2	d3	L1	L2	L3
ET-1511700	44	-	12	-	-	18
ET-1512200	51	-	12	-	-	18
ET-1511900	76	-	16	-	-	18
ET-1512500	89	-	16	-	-	18

Pipe bend with connections for service indicator and exhaust

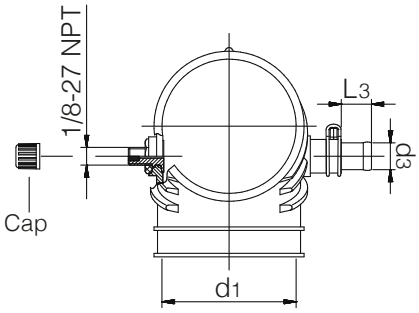

Code	Dimensions in mm					
	d1	d2	d3	L1	L2	L3
ET-1512600	44	-	12	-	-	18
ET-1512700	51	-	12	-	-	18
ET-1512400	76	-	16	-	-	18
ET-1513000	89	-	16	-	-	18

Reducing elbows

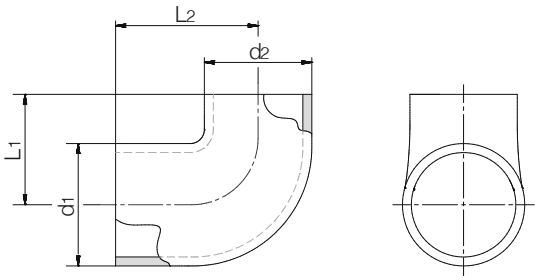

Code	Dimensions in mm					
	d1	d2	d3	L1	L2	L3
ET-1698100	70	60	-	74	95,5	-

Straight pipe connections

The Longday pipe are manufactured of NBR and to garantee the best seal and easier installation. Longday use material which meet the oem requirements.

Elbow and pipe have the possibility to be supplied with indicator plug and blow by.

Specifications:

- Temperature working range -30 °C +120 °C with peaks +130 °C
- Resistant to oil and lubricants
- Low restriction
- High resistance to vibrations and implosion
- Suit to medium applications
- Indicator plug and blow by as option
- Good noise absorbtion
- Reliable seal

Rubber pipe

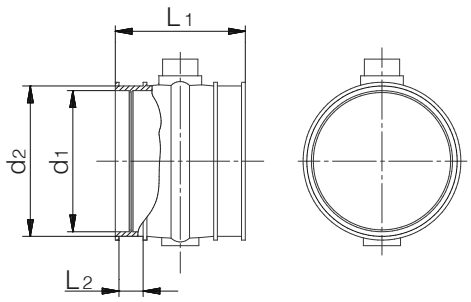

Code	Dimensions in mm					
	d1	d2	d3	L1	L2	L3
ET-1484300	44	49	-	70	13	-
ET-1484700	51	55	-	70	13	-
ET-1482800	76	81	-	70	13	-
ET-1482400	89	95	-	80	13	-
ET-1536700 *	101	107	-	90	13	-

* Delivery times to be agreed

Rubber pipe with connection for service indicator

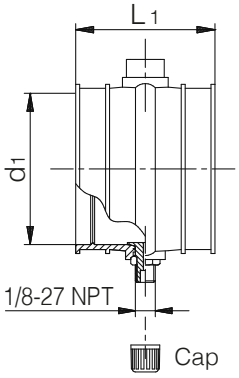

Code	Dimensions in mm					
	d1	d2	d3	L1	L2	L3
ET-1511100	44	-	-	70	-	-
ET-1510500	51	-	-	70	-	-
ET-1511600	76	-	-	70	-	-
ET-1512000	89	-	-	80	-	-
ET-1536900 *	101	-	-	90	-	-

* Delivery times to be agreed

Rubber pipe with connection for exhaust

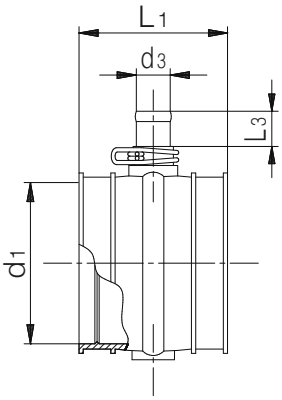

Code	Dimensions in mm					
	d1	d2	d3	L1	L2	L3
ET-1547700	44	-	12	70	-	18
ET-1548000	51	-	12	70	-	18
ET-1532100	76	-	16	70	-	18
ET-1542800	89	-	16	80	-	18
ET-1548300 *	101	-	16	90	-	18

* Delivery times to be agreed

Rubber pipe with connection for service indicator and exaust

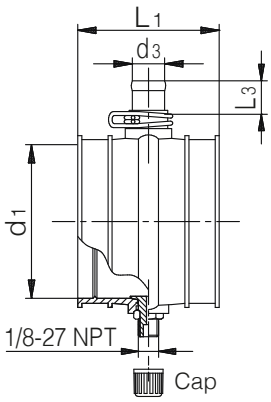

Code	Dimensions in mm					
	d1	d2	d3	L1	L2	L3
ET-1547900	51	-	12	70	-	18
ET-1548400	76	-	16	70	-	18
ET-1548800	89	-	16	80	-	18
ET-1542700 *	101	-	16	90	-	18

* Delivery times to be agreed

Metal extension - Only for unfiltered air intake

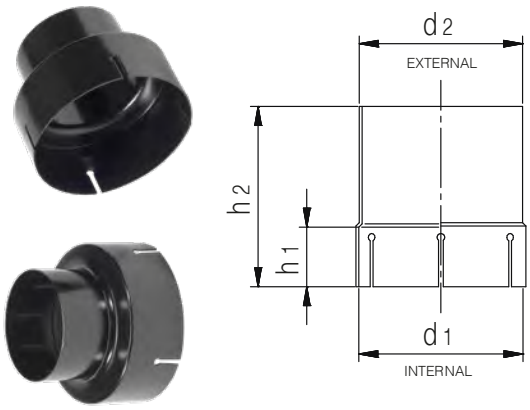

Code	Dimensions in mm				
	d1	d2	h1	h2	L1
ET-1219000	64	63,5	30	110	-
ET-1219100	76,5	76	32	110	-
ET-1109900	76,5	76	32	200	-
ET-1280500	102,5	102	70	530	-
ET-1286500	76,5	70	25	40	-
ET-1519800	76,5	76	35	70	-
ET-1150100	88	62	35	70	-
ET-1150200	88	50	35	70	-
ET-1348700	150	100	35	70	-
ET-1400800	50	40	30	80	-
ET-1675700	114,2	102	40	87	-
ET-1475500	114,5	114	40	160	-
ET-1549500	127,5	115	40	89	-
ET-1594000	96	96	25	130	-
ET-1932300	96	96	25	150	-
ET-1634500	96	95	25	280	-
ET-1636000 *	76	60	19	58	-
ET-1639400	96	96	25	85	-
ET-1658500	96	96	25	78	-
ET-1476300	100,5	114	40	82	-

* With special gasket

Metal extensions and pipe bends are designed to be applied only in suction of unfiltered air.

Specifications:

- Made of steel
- Painted
- High corrosion resistance
- High vibrations resistance
- Easy installation

Metal pipe bend - Only for unfiltered air intake

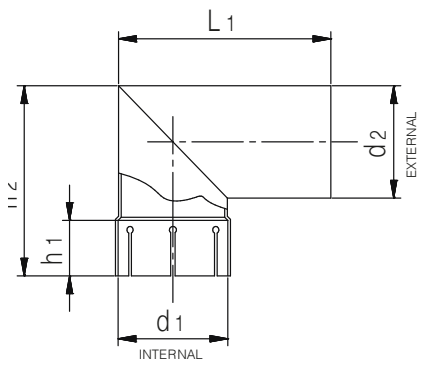

Metal extensions and pipe bends are designed to be applied only in suction of unfiltered air.

Specifications:

- Made of steel
- Painted
- High corrosion resistance
- High vibrations resistance
- Easy installation

Code	Dimensions in mm				
	d1	d2	h1	h2	L1
ET-1219200	63,5	63,5	28	92	152
ET-1219300	51,1	51	40	100,5	100
ET-1219400	44,2	45	36	81	90
ET-1265200	50	50	30	90	100
ET-1401100	50	40	26	80	65
ET-1521900	76	76	26	121	110